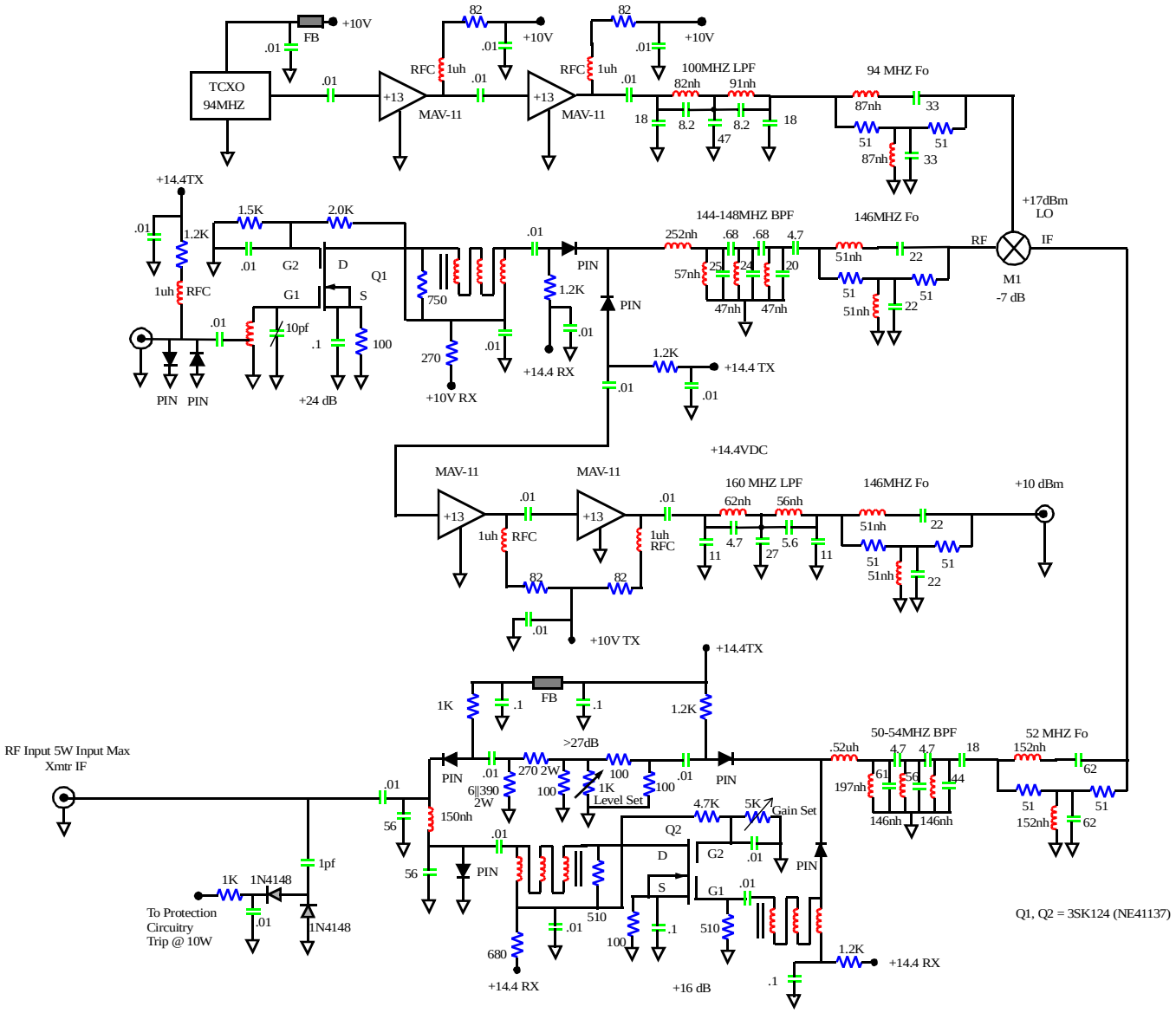2 Meter Transverter by KD9JQ 1-29-95